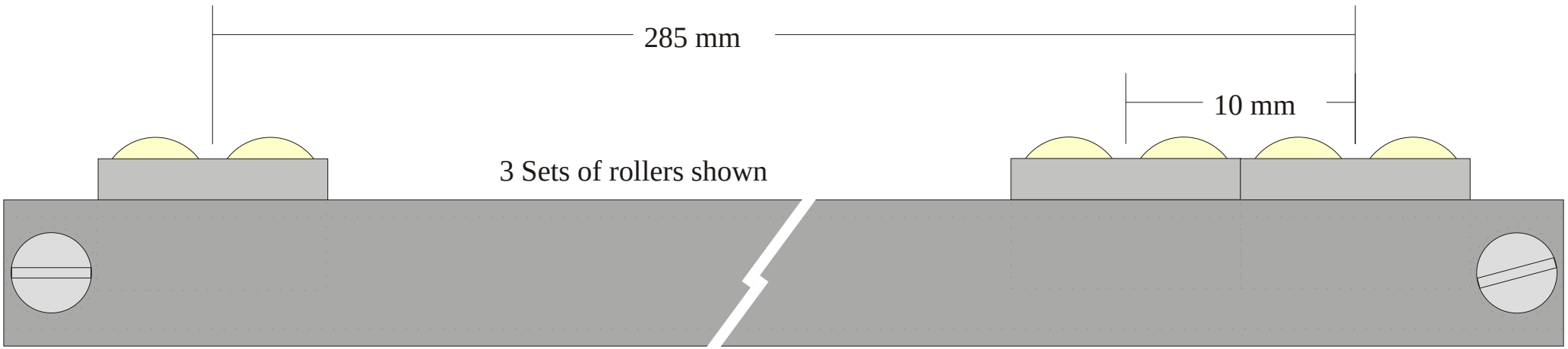

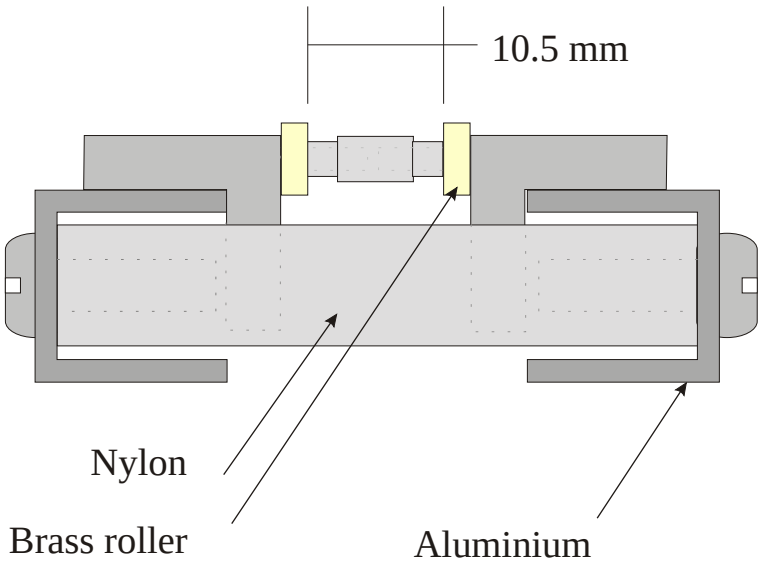

“HOn3” Gauge 10.5 mm Rolling Road

10mm	Minimum Wheelbase
285mm	Maximum Wheelbase
8	Sets rollers as standard

Not to scale

© copyright Rolling Rails 2005